LED Panel Light

iLIGHTING® Green • Professional

Lighting Source

Model : PL-PN6060-B

Features:

1.Edge-lite LED panels for office & commercial application.

2.Suitable for installation in Recessed Ceilings.

3. Uniform light emission by using optical Polycarbonate.

4. High light efficiency 90lm/W (other option :100lm/W)

5.Emergency option available: compatible in use with most emergency battery brands & comply with part A11 of FSD regulation PPA104

Model:PL-PN6060-B

iLighting Global Enterprise Co Ltd

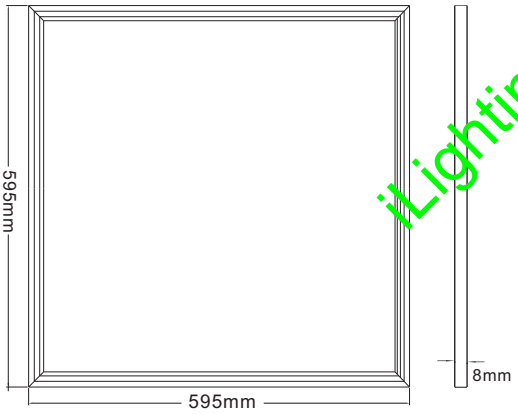

Standard

Dimension	595*595*8mm	295*1195*8mm
Voltage (V)	AC200-240V	
Beam Angle:	180 degree	
CRI	>80Ra	
Luminous Efficacy	90~100lm/W	
Power Factor	> 0.95	
Power (W)	40W	
Color Temperature	3000K-6500K	
Operating Temperature	-20°C~45°C	
Life Time	50,000(H)	
IP Grade	IP 40	
UGR	≤22	

www.ilighting.com.hk

Room B3, 18/F Bonsun Industrial Building, 364-366 Sha Tsui Road, Tsuen Wan,HongKong
Phone: 852-35863418 Fax: 852-35440462 info@ilighting.com.hk

LED Panel Light

iLIGHTING® Green • Professional

Lighting Source

Model : PL-PN6060-B
Model : PL-PN30120-B

Features:

1.Edge-lite LED panels for office & commercial application.

2.Suitable for installation in Recessed Ceilings.

3. Uniform light emission by using optical Polycarbonate

4. High light efficiency 100lm/W (other option :120lm/W)

5.Emergency option available: compatible in use with most emergency battery brands & comply with part A11 of FSD regulation PPA104

Model:PL-PN6060-B
Model:PL-PN30120-B

iLighting Global Enterprise Co Ltd

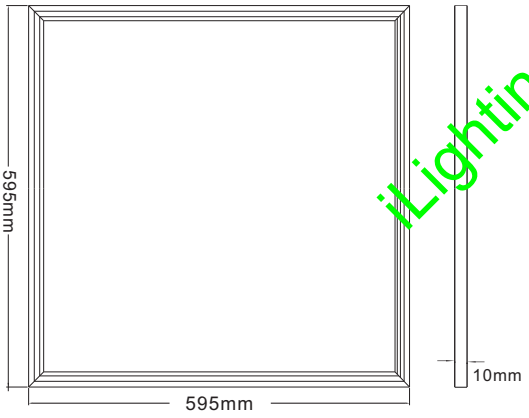

Standard

Dimension	595*595*10mm 295*1195*10mm
Voltage (V)	AC100-240V
Beam Angle:	180 degree
CRI	>80Ra
Luminous Efficacy	100~120lm/W
Power Factor	> 0.95
Power (W)	40W
Color Temperature	3000K-6500K
Operating Temperature	-20°C~45°C
Life Time	50,000(H)
IP Grade	IP 40
UGR	≤19

www.ilighting.com.hk
Room B3, 18/F Bonsun Industrial Building, 364-366 Sha Tsui Road, Tsuen Wan,HongKong
Phone: 852-35863418 Fax: 852-35440462 info@ilighting.com.hk

LED Panel Light

iLIGHTING® Green • Professional

Lighting Source

Model : PL-PN6060-B

Features:

1.Edge-lite LED panels for office & commercial application.

2.Suitable for installation in Recessed Ceilings.

3. Uniform light emission by using optical Polycarbonate.

4. High light efficiency 90lm/W (other option :120lm/W)

5.Emergency option available: compatible in use with most emergency battery brands & comply with part A11 of FSD regulation PPA104

Model:PL-PN6060-B

iLighting Global Enterprise Co Ltd

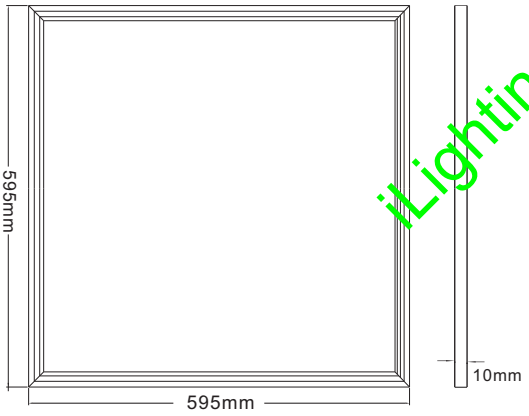

Standard

Dimension	595*595*10mm
Voltage (V)	AC100-240V
Beam Angle:	180 degree
CRI	>80Ra
Luminous Efficacy	90~120lm/W
Power Factor	> 0.95
Power (W)	40W
Color Temperature	3000K-6500K
Operating Temperature	-20°C~45°C
Life Time	50,000(H)
IP Grade	IP 40
UGR	≤22

www.ilighting.com.hk

Room B3, 18/F Bonsun Industrial Building, 364-366 Sha Tsui Road, Tsuen Wan,HongKong
Phone: 852-35863418 Fax: 852-35440462 info@ilighting.com.hk

LED Panel Light

iLIGHTING® Green • Professional

Lighting Source

Model : PL-PN6060-B

Features:

1.Edge-lite LED panels for office & commercial application.

2.Suitable for installation in Recessed Ceilings.

3. Uniform light emission by using optical Polycarbonate.

4. High light efficiency 100lm/W

5.Emergency option available: compatible in use with most emergency battery brands & comply with part A11 of FSD regulation PPA104

Model:PL-PN6060-B

iLighting Global Enterprise Co Ltd

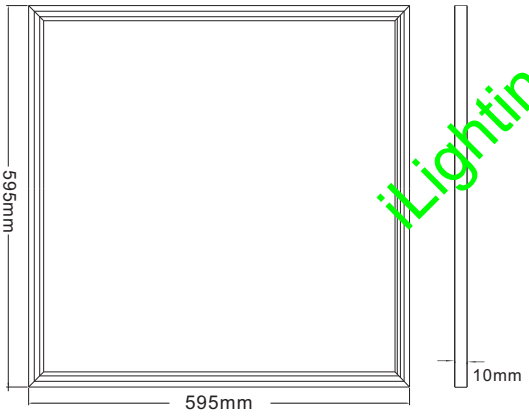

Standard

Dimension	595*595*10mm
Voltage (V)	AC100-240V
Beam Angle:	180 degree
CRI	>80Ra
Luminous Efficacy	100lm/W
Power Factor	> 0.95
Power (W)	40W
Color Temperature	3000K-6500K
Operating Temperature	-20°C~45°C
Life Time	50,000(H)
IP Grade	IP 65
UGR	≤22

www.ilighting.com.hk

Room B3, 18/F Bonsun Industrial Building, 364-366 Sha Tsui Road, Tsuen Wan,HongKong
Phone: 852-35863418 Fax: 852-35440462 info@ilighting.com.hk

LED Panel Light

iLIGHTING® Green • Professional

Lighting Source

Model : PL-PN6060-B
Model : PL-PN6262-B
Model : PL-PN30120-B

Features:

1.Edge-lite LED panels for office & commercial application.

2.Suitable for installation in Recessed Ceilings.

3. Uniform light emission by using optical Polycarbonate.

4. High light efficiency 90lm/W

5.Emergency option available: compatible in use with most emergency battery brands & comply with part A11 of FSD regulation PPA104

Model:PL-PN6060-B
Model:PL-PN6262-B
Model:PL-PN30120-B

iLighting Global Enterprise Co Ltd

Standard

Dimension	595*595*10mm 620*620*10mm 295*1195*10mm
Voltage (V)	AC100-240V
Beam Angle:	180 degree
CRI	>80Ra
Luminous Efficacy	90lm/W
Power Factor	> 0.95
Power (W)	40W
Color Temperature	3000K-6500K
Operating Temperature	-20°C~45°C
Life Time	50,000(H)
IP Grade	IP 40
UGR	≤22

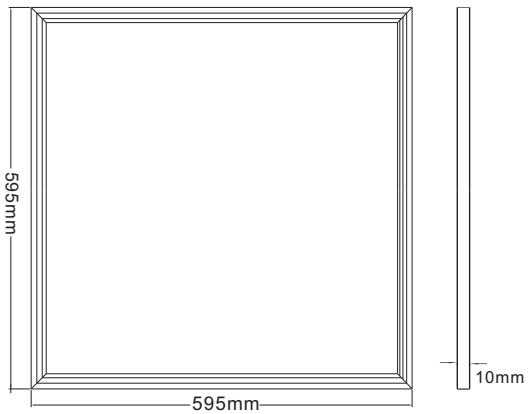

www.ilighting.com.hk
Room B3, 18/F Bonsun Industrial Building, 364-366 Sha Tsui Road, Tsuen Wan,HongKong
Phone: 852-35863418 Fax: 852-35440462 info@ilighting.com.hk

LED Panel Light

Lighting Source

Model : PL-PN6060-B
Model : PL-PN6262-B
Model : PL-PN30120-B

Features:

1.Edge-lite LED panels for office & commercial application.

2.Suitable for installation in Recessed Ceilings.

3. Uniform light emission by using optical Polycarbonate.

4. High light efficiency 90lm/W (other option :100lm/W)

5.Emergency option available: compatible in use with most emergency battery brands & comply with part A11 of FSD regulation PPA104

Model:PL-PN6060-B
Model:PL-PN6262-B
Model:PL-PN30120-B

iLighting Global Enterprise Co Ltd

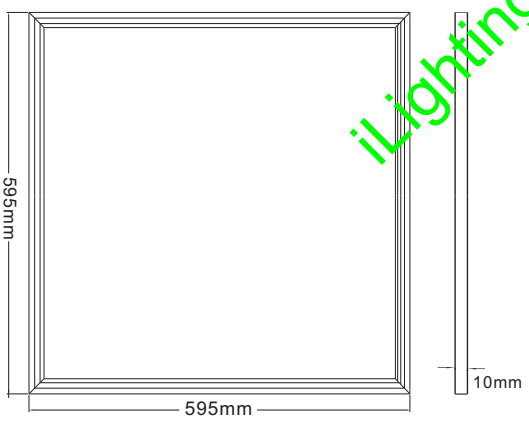

Standard

Dimension	595*595*10mm 620*620*10mm 295*1195*10mm
Voltage (V)	AC220-240V
Beam Angle:	180 degree
CRI	>80Ra
Luminous Efficacy	90~100lm/W
Power Factor	> 0.95
Power (W)	40W
Color Temperature	3000K-6500K
Operating Temperature	-25°C~40°C
Life Time	50,000(H)
IP Grade	IP 40

www.ilighting.com.hk
Room B3, 18/F Bonsun Industrial Building, 364-366 Sha Tsui Road, Tsuen Wan,HongKong
Phone: 852-35863418 Fax: 852-35440462 info@ilighting.com.hk

LED Panel Light

iLIGHTING® Green • Professional

Lighting Source

Model : PL-PN6060-B
Model : PL-PN30120-B

Features:

1.Edge-lite LED panels for office & commercial application.

2.Suitable for installation in Recessed Ceilings.

3. Uniform light emission by using optical Polycarbonate.

4. High light efficiency 90lm/W

5.Emergency option available: compatible in use with most emergency battery brands & comply with part A11 of FSD regulation PPA104

Model:PL-PN6060-B
Model:PL-PN30120-B

iLighting Global Enterprise Co Ltd

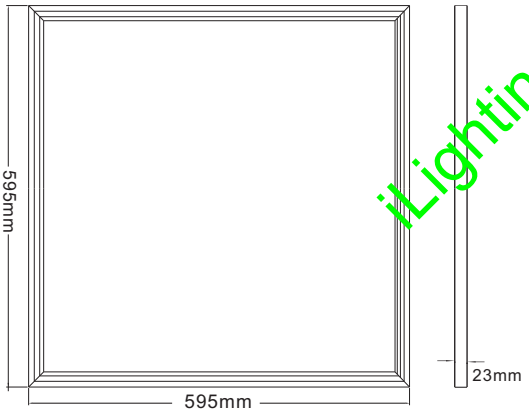

Standard

Dimension	595*595*23mm 295*1195*23mm
Voltage (V)	AC200-240V
Beam Angle:	180 degree
CRI	>80Ra
Luminous Efficacy	90lm/W
Power Factor	> 0.95
Power (W)	40W
Color Temperature	3000K-6500K
Operating Temperature	-20°C~45°C
Life Time	50,000(H)

www.ilighting.com.hk
Room B3, 18/F Bonsun Industrial Building, 364-366 Sha Tsui Road, Tsuen Wan,HongKong
Phone: 852-35863418 Fax: 852-35440462 info@ilighting.com.hk

LED Panel Light

iLIGHTING® Green • Professional

Lighting Source

Model : PL-PN6464-B
Model : PL-PN30128-B

Features:

1.Edge-lite LED panels for office & commercial application.

2.Suitable for installation in Recessed Ceilings.

3. Uniform light emission by using optical Polycarbonate.

4. High light efficiency 110lm/W

5.Emergency option available: compatible in use with most emergency battery brands & comply with part A11 of FSD regulation PPA104

Model:PL-PN6464-B
Model:PL-PN30128-B

iLighting Global Enterprise Co Ltd

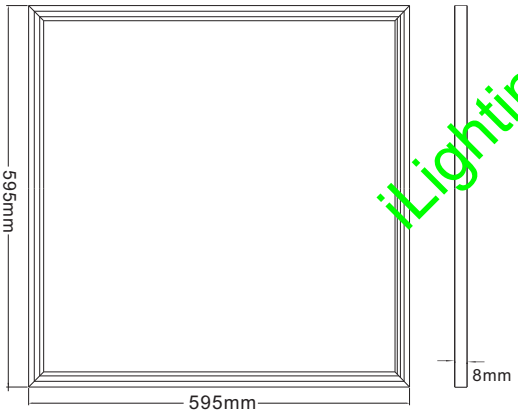

Standard

Dimension	640*640*23mm 1280*320*23mm
Voltage (V)	AC200-240V
Beam Angle:	180 degree
CRI	>80Ra
Luminous Efficacy	110lm/W
Power Factor	> 0.95
Power (W)	50W
Color Temperature	3000K-6500K
Operating Temperature	-20°C~45°C
Life Time	50,000(H)

www.ilighting.com.hk
Room B3, 18/F Bonsun Industrial Building, 364-366 Sha Tsui Road, Tsuen Wan,HongKong
Phone: 852-35863418 Fax: 852-35440462 info@ilighting.com.hk

LED Panel Light

iLIGHTING® Green • Professional

Lighting Source

Model : PL-PN6060-B

Features:

1.Edge-lite LED panels for office & commercial application.

2.Suitable for installation in Recessed Ceilings.

3. Uniform light emission by using optical Polycarbonate.

4. High light efficiency 90lm/W

5.Emergency option available: compatible in use with most emergency battery brands & comply with part A11 of FSD regulation PPA104

Model:PL-PN6060-B

iLighting Global Enterprise Co Ltd

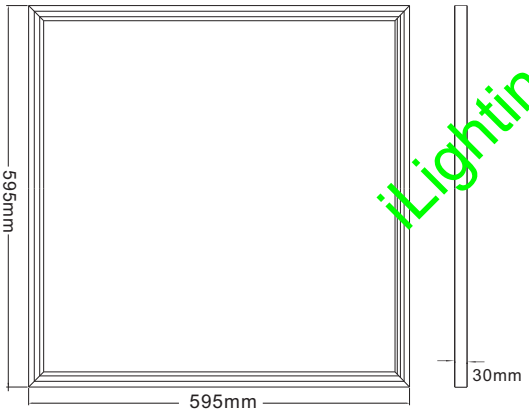

Standard	
Dimension	600*600*30mm
Voltage (V)	AC200-240V
Beam Angle:	180 degree
CRI	>80Ra
Luminous Efficacy	90lm/W
Power Factor	> 0.95
Power (W)	40W
Color Temperature	3000K/4000K/6500K
Operating Temperature	-20°C~45°C
Life Time	50,000(H)

www.ilighting.com.hk

Room B3, 18/F Bonsun Industrial Building, 364-366 Sha Tsui Road, Tsuen Wan,HongKong
Phone: 852-35863418 Fax: 852-35440462 info@ilighting.com.hk

LED Panel Light

iLIGHTING® Green • Professional

Lighting Source

Model : PL-PN

Features:

1.Edge-lite LED panels for office & commercial application.

2.Suitable for installation in Recessed Ceilings.

3. Uniform light emission by using optical Polycarbonate.

4. High light efficiency 125lm/W

5.Emergency option available: compatible in use with most emergency battery brands & comply with part A11 of FSD regulation PPA104

Model:PL-PN6060-B

iLighting Global Enterprise Co Ltd

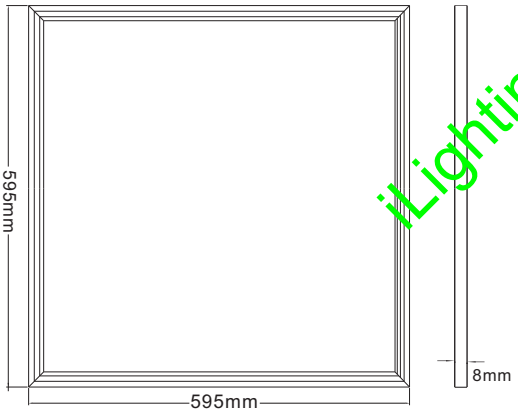

Standard

Dimension	600*600*10mm
Voltage (V)	AC100-277V
Beam Angle:	180 degree
CRI	>80Ra
Luminous Efficacy	125lm/W
Power Factor	> 0.95
Power (W)	30W
Color Temperature	3000K/4000/5000K
Operating Temperature	-20°C~45°C
Life Time	50,000(H)

www.ilighting.com.hk

Room B3, 18/F Bonsun Industrial Building, 364-366 Sha Tsui Road, Tsuen Wan,HongKong
Phone: 852-35863418 Fax: 852-35440462 info@ilighting.com.hk

LED Panel Light

Model : PL-PN6060-B

iLighting Green • Professional

Lighting Source

Features:

1.Edge-lite LED panels for office & commercial application.

2.Suitable for installation in Recessed Ceilings.

3. Uniform light emission by using optical Polycarbonate.

4. High light efficiency 100lm/W

5.Emergency option available: compatible in use with most emergency battery brands & comply with part A11 of FSD regulation PPA104

Model:PL-PN6060-B

iLighting Global Enterprise Co Ltd

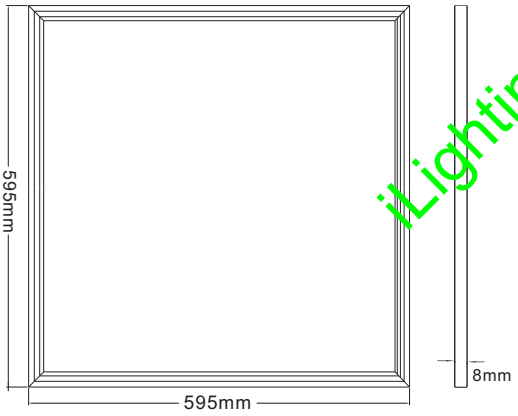

Standard

Dimension	600*600*10mm
Voltage (V)	AC100-277V
Beam Angle:	180 degree
CRI	>80Ra
Luminous Efficacy	100lm/W
Power Factor	> 0.95
Power (W)	40W
Color Temperature	3000K/4000/5000K
Operating Temperature	-20°C~45°C
Life Time	50,000(H)

www.ilighting.com.hk

Room B3, 18/F Bonsun Industrial Building, 364-366 Sha Tsui Road, Tsuen Wan,HongKong
Phone: 852-35863418 Fax: 852-35440462 info@ilighting.com.hk

LED Panel Light

iLIGHTING® Green • Professional

Lighting Source

Model : PL-PN30120-B

Features:

1.Edge-lite LED panels for office & commercial application.

2.Suitable for installation in Recessed Ceilings.

3. Uniform light emission by using optical Polycarbonate.

4. High light efficiency 125lm/W

5.Emergency option available: compatible in use with most emergency battery brands & comply with part A11 of FSD regulation PPA104

Model:PL-PN30120-B

iLighting Global Enterprise Co Ltd

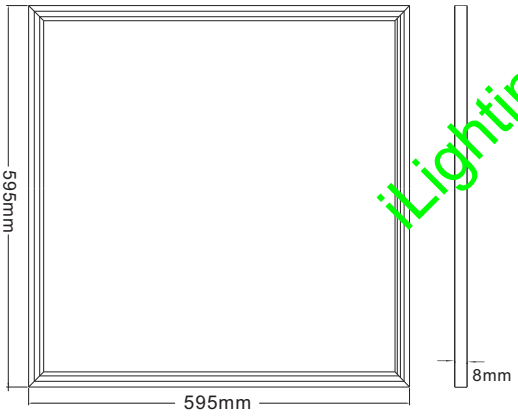

Standard

Dimension	300*1200*10mm
Voltage (V)	AC100-277V
Beam Angle:	180 degree
CRI	>80Ra
Luminous Efficacy	125lm/W
Power Factor	> 0.95
Power (W)	30W
Color Temperature	3000K/4000/5000K
Operating Temperature	-20°C~45°C
Life Time	50,000(H)

www.ilighting.com.hk

Room B3, 18/F Bonsun Industrial Building, 364-366 Sha Tsui Road, Tsuen Wan,HongKong
Phone: 852-35863418 Fax: 852-35440462 info@ilighting.com.hk

LED Panel Light

ILIGHTING® Green • Professional

Lighting Source

Model : PL-PN30120-B

Features:

1.Edge-lite LED panels for office & commercial application.

2.Suitable for installation in Recessed Ceilings.

3. Uniform light emission by using optical Polycarbonate.

4. High light efficiency 100lm/W

5.Emergency option available: compatible in use with most emergency battery brands & comply with part A11 of FSD regulation PPA104

Model:PL-PN30120-B

iLighting Global Enterprise Co Ltd

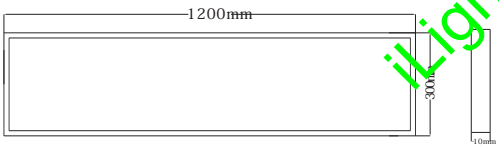

Standard

Dimension	300*1200*10mm
Voltage (V)	AC100-277V
Beam Angle:	180 degree
CRI	>80Ra
Luminous Efficacy	100lm/W
Power Factor	> 0.95
Power (W)	36W
Color Temperature	3000K/4000/5000K
Operating Temperature	-20°C~45°C
Life Time	50,000(H)

www.ilighting.com.hk

Room B3, 18/F Bonsun Industrial Building, 364-366 Sha Tsui Road, Tsuen Wan,HongKong
Phone: 852-35863418 Fax: 852-35440462 info@ilighting.com.hk

LED Panel Light

iLIGHTING® Green • Professional

Lighting Source

Model : PL-PN60120B

Features:

1.Edge-lite LED panels for office & commercial application.

2.Suitable for installation in Recessed Ceilings.

3. Uniform light emission by using optical Polycarbonate.

4. High light efficiency 125lm/W

5.Emergency option available: compatible in use with most emergency battery brands & comply with part A11 of FSD regulation PPA104

Model:PL-PN60120-B

iLighting Global Enterprise Co Ltd

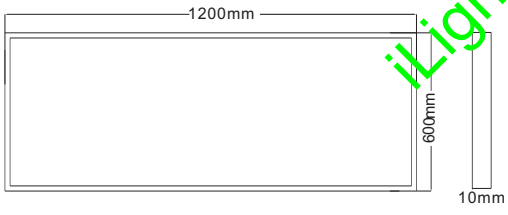

Standard

Dimension	600*1200*10mm
Voltage (V)	AC100-277V
Beam Angle:	180 degree
CRI	>80Ra
Luminous Efficacy	125lm/W
Power Factor	> 0.95
Power (W)	40W
Color Temperature	3000K/4000/5000K
Operating Temperature	-20°C~45°C
Life Time	50,000(H)

www.ilighting.com.hk

Room B3, 18/F Bonsun Industrial Building, 364-366 Sha Tsui Road, Tsuen Wan,HongKong
Phone: 852-35863418 Fax: 852-35440462 info@ilighting.com.hk

LED Panel Light

Model : PL-PN60120-B

Lighting Source

Features:

1.Edge-lite LED panels for office & commercial application.

2.Suitable for installation in Recessed Ceilings.

3. Uniform light emission by using optical Polycarbonate.

4. High light efficiency 100lm/W

5.Emergency option available: compatible in use with most emergency battery brands & comply with part A11 of FSD regulation PPA104

Model:PL-PN60120-B

iLighting Global Enterprise Co Ltd

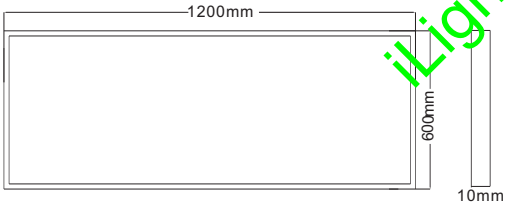

Standard

Dimension	600*1200*10mm
Voltage (V)	AC100-277V
Beam Angle:	180 degree
CRI	>80Ra
Luminous Efficacy	100lm/W
Power Factor	> 0.95
Power (W)	50W
Color Temperature	3000K/4000/5000K
Operating Temperature	-20°C~45°C
Life Time	50,000(H)

www.ilighting.com.hk

Room B3, 18/F Bonsun Industrial Building, 364-366 Sha Tsui Road, Tsuen Wan,HongKong
Phone: 852-35863418 Fax: 852-35440462 info@ilighting.com.hk